TORQUE USA

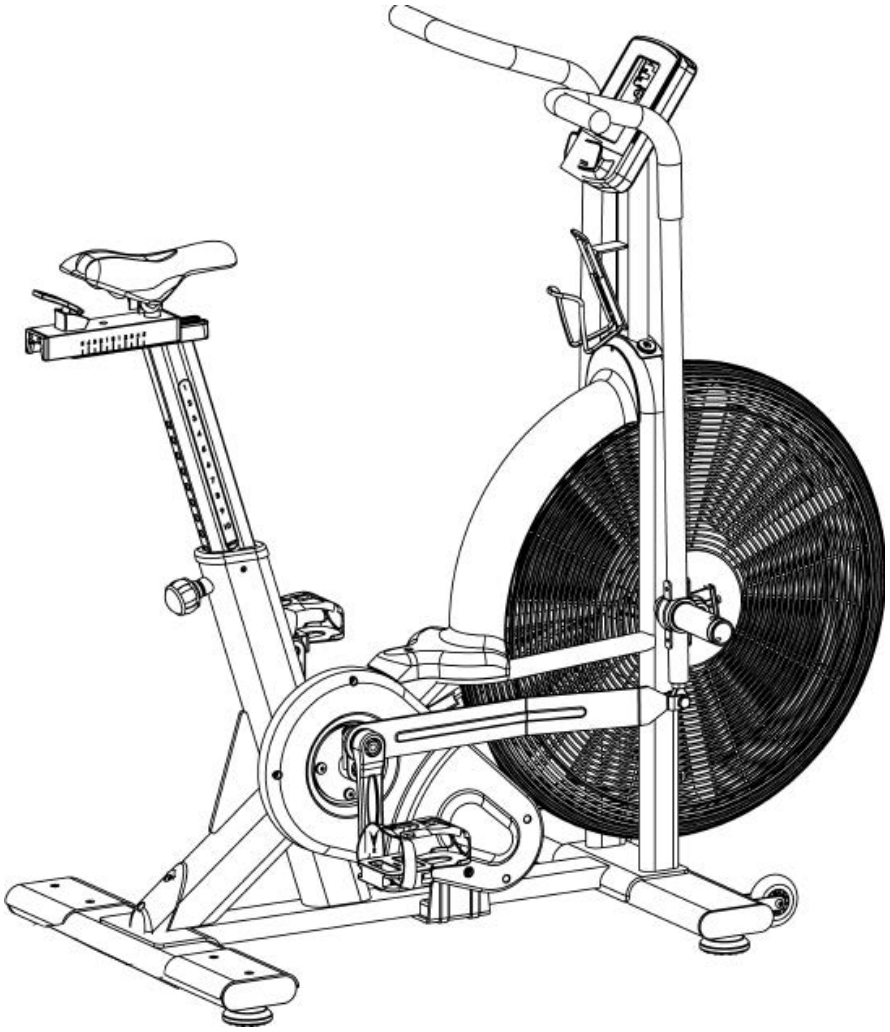

Stealth Air Bike XR

Assembly & User Instructions

Model No.: AB-TS-XR-101

Manual P/N: 6147801

This product is compliant with the applicable CE requirements.

Stealth Air Bike XR
Assembly & User Instructions

Table of Contents

IMPORTANT SAFETY INSTRUCTIONS.....3

Air Bike Product Specifications.....5

Battery Specifications and Instructions 6

Parts.Instructions-Sheets..... 8

Air Bike Assembly Instructions..... 12

STEP 1: Attach Front &Rear Stabilizers..... 12

STEP 2: Adjusting the Seat Height and Installing the Seat..... 13

STEP 3: Install Console &Bottle Holder..... 14

STEP 4: Install Handlebars &Pedals..... 15

STEP 5: Seat Pedal Installation..... 16

Console Manual.....17

Maintenance..... 18

Limited Product Warranty 19

IMPORTANT SAFETY INSTRUCTIONS

WARNING: The safety of this product can be maintained only if it is examined regularly for damage and wear.

- *Keep children and pets away from the bicycle during assembly and use.*
- *Keep all loose clothing, hair and shoelaces away from moving parts.*
- **DO NOT** *attempt to use the Stealth Air Bike for any purposes other than that for which it was intended.*
- *Wear shoes with rubber or high-traction soles. High heels, dress shoes, sandals or bare feet are not suitable for use with the Stealth Air Bike.*
- *Examine the Stealth Air Bike before each use for loose parts or signs of wear. Do not use if found in this condition.*
- **DO NOT** *exit the Stealth Air Bike until the arms and pedals have come to a complete stop.*
- *Check the security of the seat and arms before each use. If loose or wobbly, tighten securely before use.*
- *Consult your physician before beginning an exercise program using this equipment.*
- *Injuries to health may result from incorrect or excessive training.*
- **DO NOT** *drop or put objects into any opening in the fan assembly or any other part of the unit.*
- *Use caution when pedaling and stopping; the braking system is speed dependent.*
- *Set up the Stealth Air Bike on a solid, level, horizontal surface. Use the levelers on the front stabilizer to eliminate any side-to-side wobble during use.*
- *Position the bike in a space with a minimum of 2 feet (0.6 meter) on either side.*
- **DO NOT** *try to change the design or functionality of this machine. Doing so could compromise the safety of this machine and will void the warranty.*
- *User weight is not to exceed 350 lbs (159 kg).*
- *The unit is intended for indoor use only.*

SAVE THESE INSTRUCTIONS

FCC Warning

SAVE THESE INSTRUCTIONS

Air Bike Product Specifications

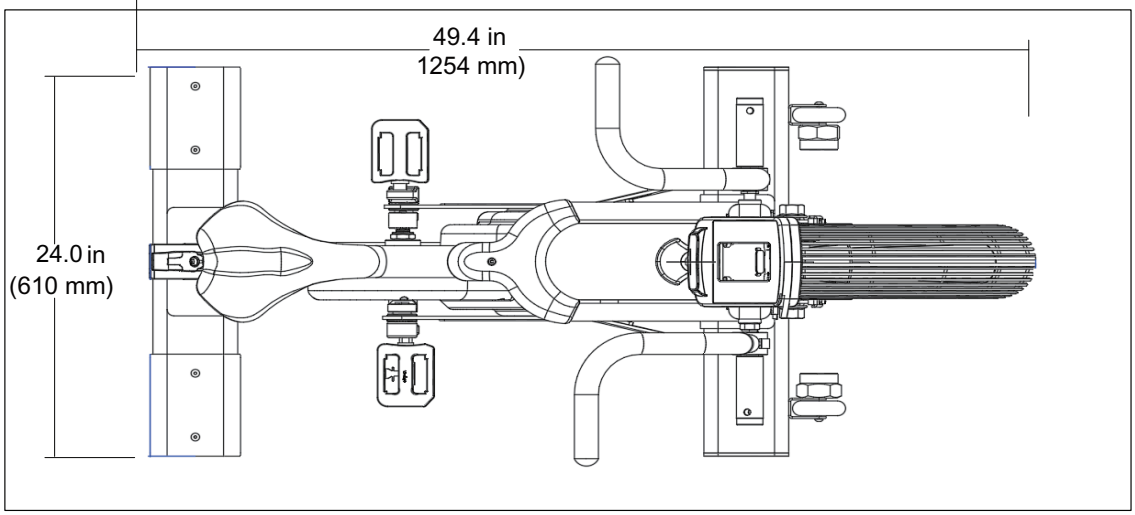

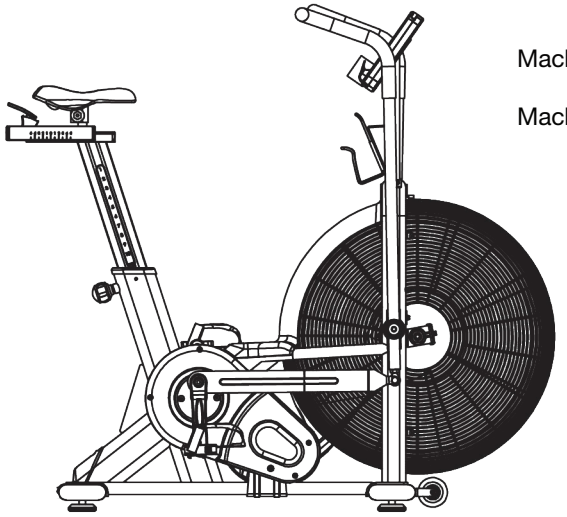

Machine Weight: 121 lbs.
(55 kg)
Machine Height: 50 in
(5270 mm)

Power Req

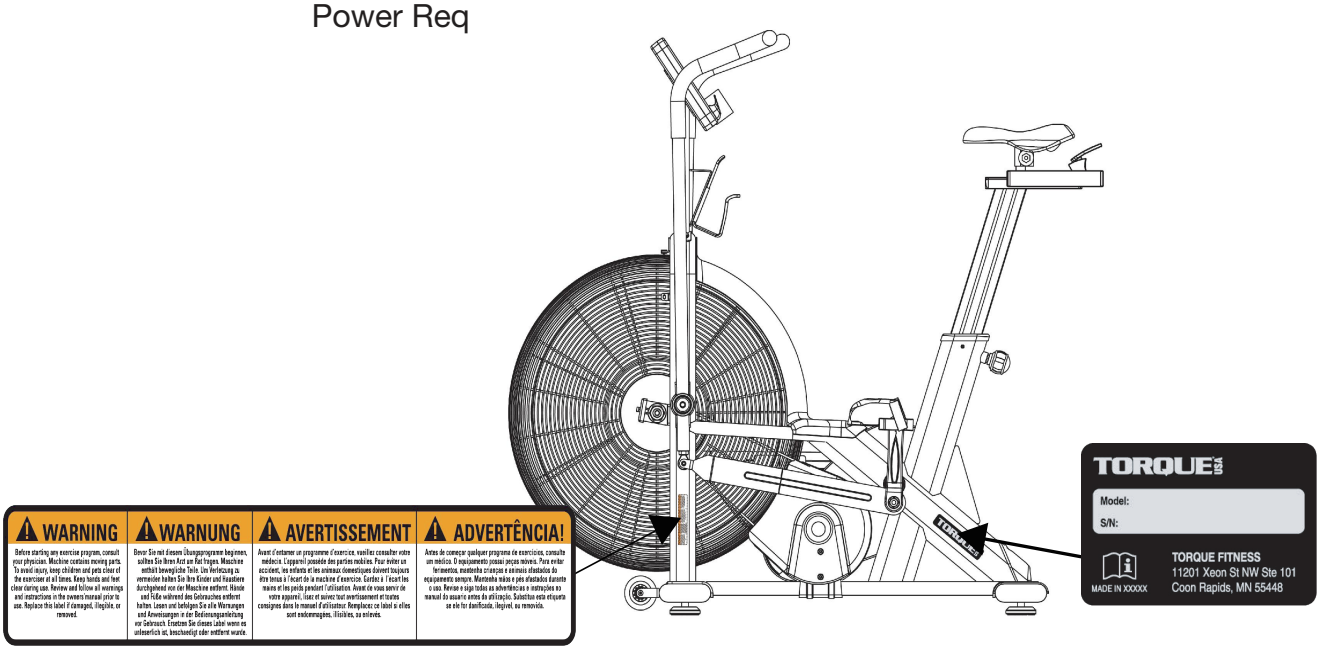

Battery Specificatiions and Precautions

1. The Stealth *Air Bike* console is powered by two “AAA” batteries. To install the batteries:
2. Insert two (2) fresh AAA batteries, oriented as shown on the diagram in the battery compartment. Batteries may be alkaline or lithium, rechargeable or non-rechargeable.

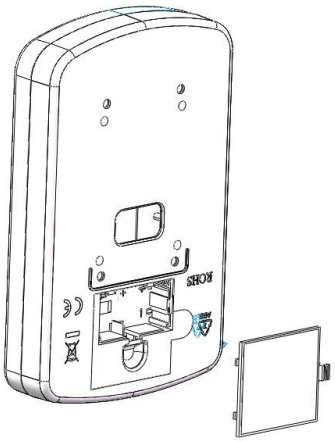

The following precautions should be taken:

- Do not recharge non-rechargeable batteries.
- Do not mix different types of batteries or new and used batteries.
- Insert batteries with the correct polarity, according to the diagram embossed in the battery compartment.
- Remove depleted batteries and safely disposed of them according to local regulations.
- If the appliance is to be stored unused for a long period, remove the batteries.
- Do not short-circuit the supply terminals.

Parts Instruction Sheets

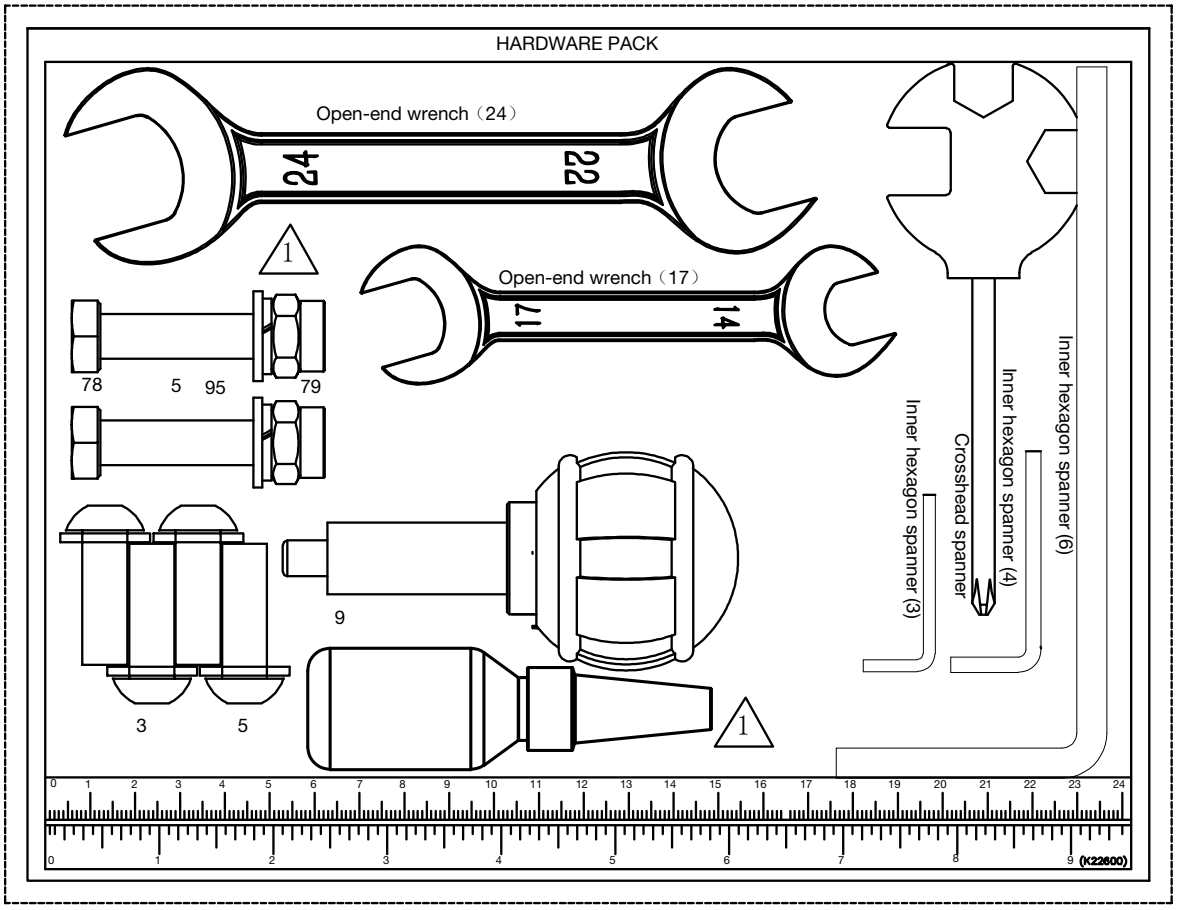

ITEM.	DESCRIPTION.	SPEC	QTY.
3	BOLT1	M10*30	4
5	FLAT WASHER	M10	6
9	SHAPE KNOB	M16*35	1
78	BOLT3	M10*50	2
79	NUT	M10	2
95	SPRING WASHER	M10	2

A.

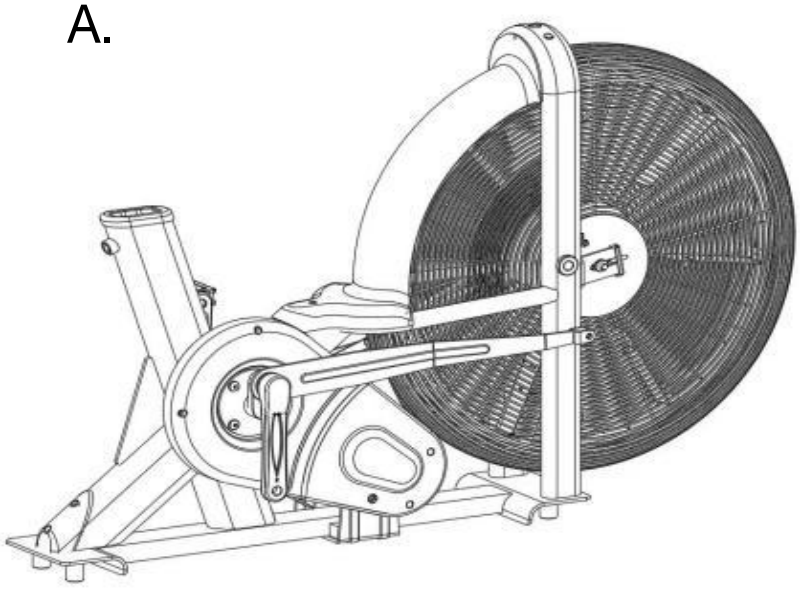

B.

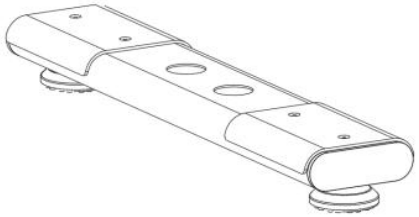

C.

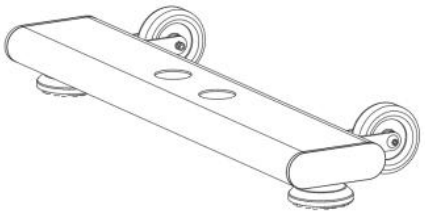

D.

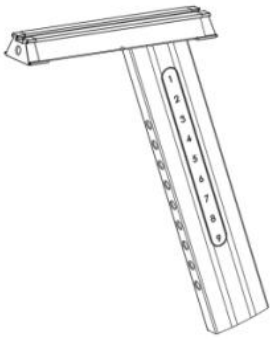

E.

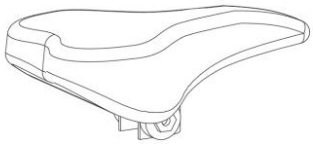

ITEM.	DESCRIPTION.	QTY.
	Hardware Pack	1
A	Main Frame	1
B	Rear Stabilizer	1
C	Front Stabilizer	1
D	Seat Post	1
E	Seat	1

F.

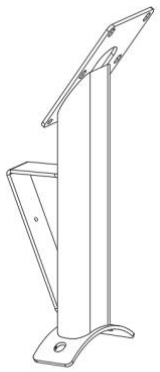

G.

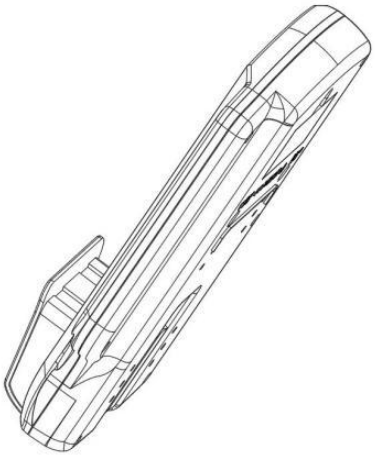

G1.



F1.

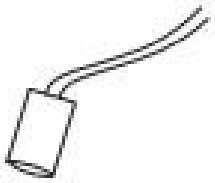

H.



G2.

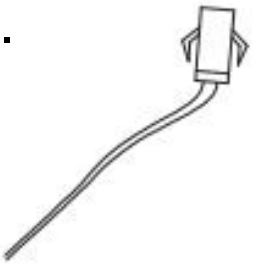

F2.

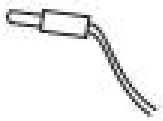

ITEM.	DESCRIPTION.	QTY.
F	Console Mounting Bracket	1
G	Console	1
G1，G2	Connect plugs	1
F1，F2	Connect plugs	1
H	Bottle Holder	1

J.



K.

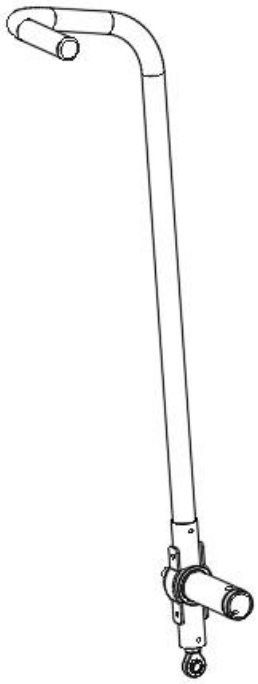

M.

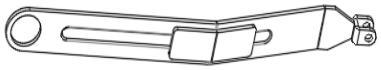

P.

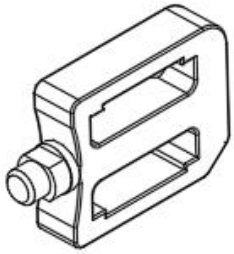

N.

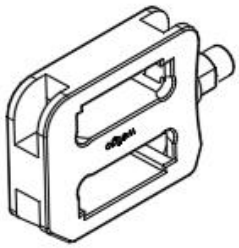

ITEM.	DESCRIPTION.	QTY.
J	Left Handlebar	1
K	Right Handlebar	1
M	Transfer Link	1
N	Pedal (R)	1
P	Pedal (L)	1

Air Bike Assembly Instructions

STEP 1: Attach Front & Rear Stabilizers

1. Attach the Front Stabilizer (C) to the Main Frame (A).

Use bolts (3) and flat washers (5) to lock the front stabilizer securely in place.

Use an allen wrench 6 to tighten them firmly until fully secure.

2. Attach the Rear Stabilizer (B) to the Main Frame (A).

Again, use bolts (3) and flat washers (5) to lock the rear stabilizer securely in place.

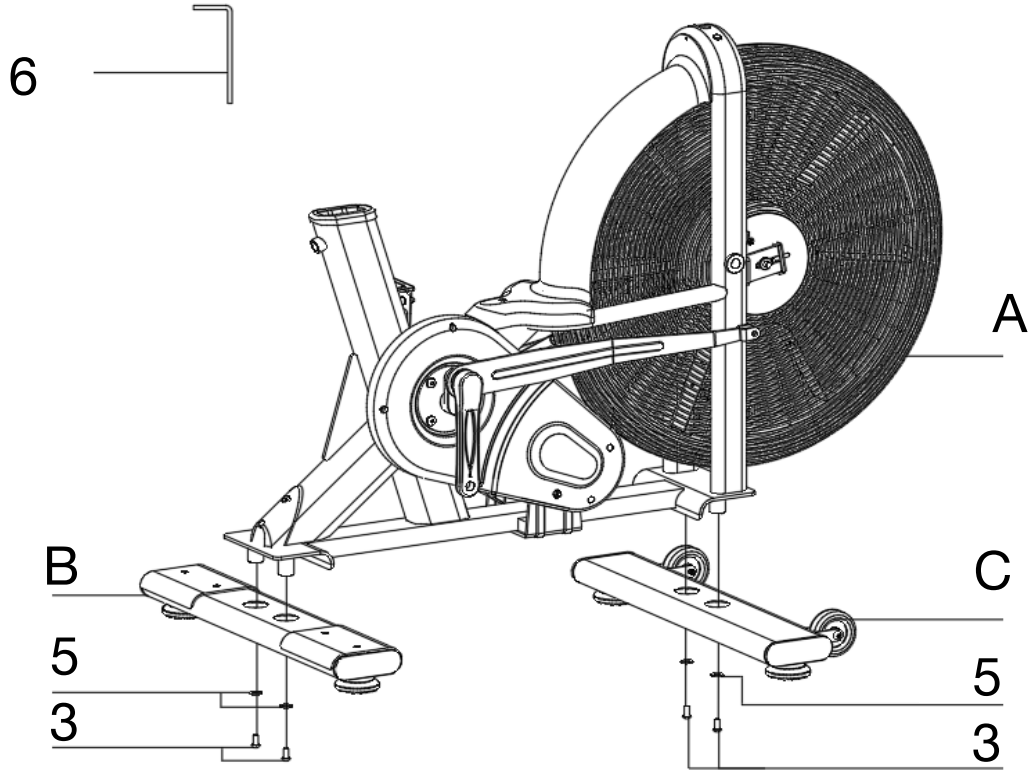

STEP 2: Adjusting the Seat Height and Installing the Seat

1. Slide the Vertical Seat Post (D) into the seat post housing on the Main Frame (A). Loosen the Adjustment Knob (9), pull it outward, and adjust the seat post to the desired height. Release the knob to lock it into position, then tighten it securely.

2. Now attach the Seat (E) onto the Seat Post (D). Place the seat onto the top of the seat post as shown in the diagram.

3. Use the supplied cross head spanner to tighten the bolts underneath the seat, making sure the seat is secured firmly and does not wobble.

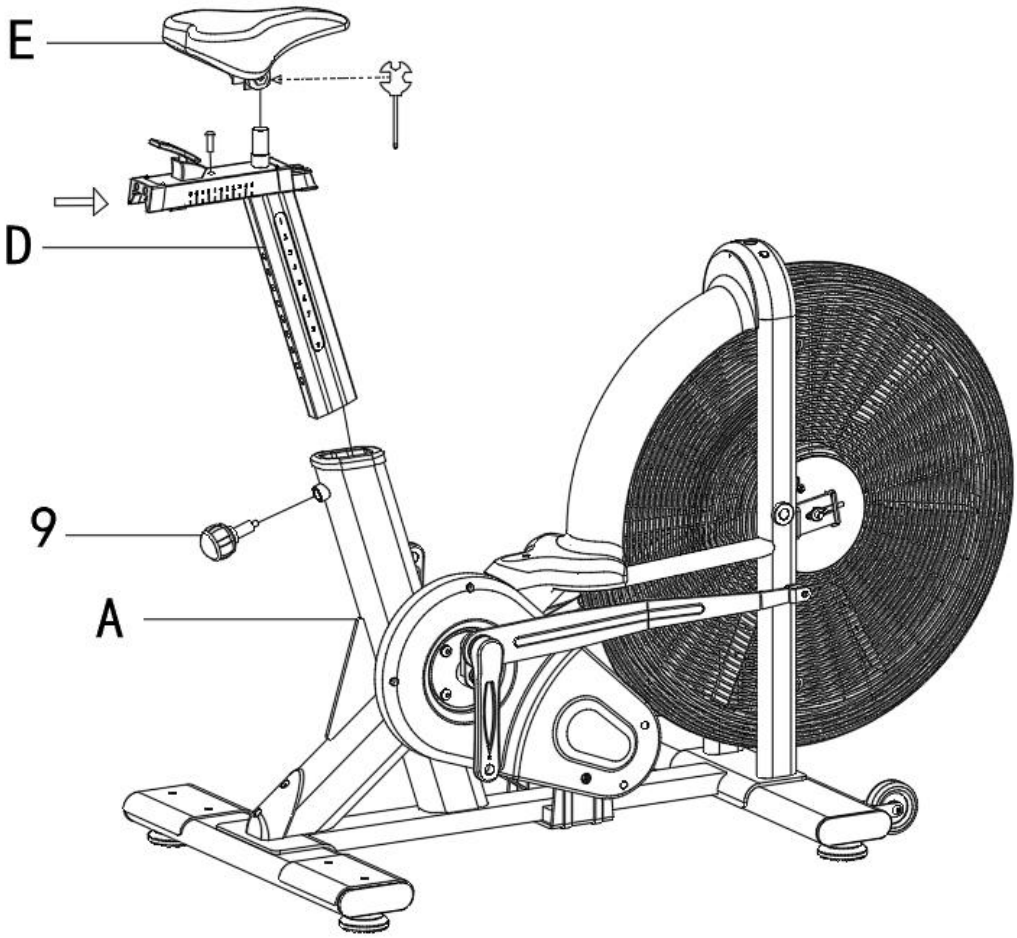

STEP 3: Install Console & Bottle Holder

1. Connect Console Bracket (F)

A. Connect plugs F1 and F2.

B. Attach the console bracket (F) to the main frame using the original hex bolt and lock washer. Use an allen wrench 4 to tighten them firmly until fully secure.

2. Install Console (G):

A. Connect plugs G1 and G2.

B. Secure the console (G) to the bracket (F) using screws.

3. Install Bottle Holder(H) :

A. Mount the bottle holder (H) onto the console bracket.

B. Use the two original screws to secure it firmly.

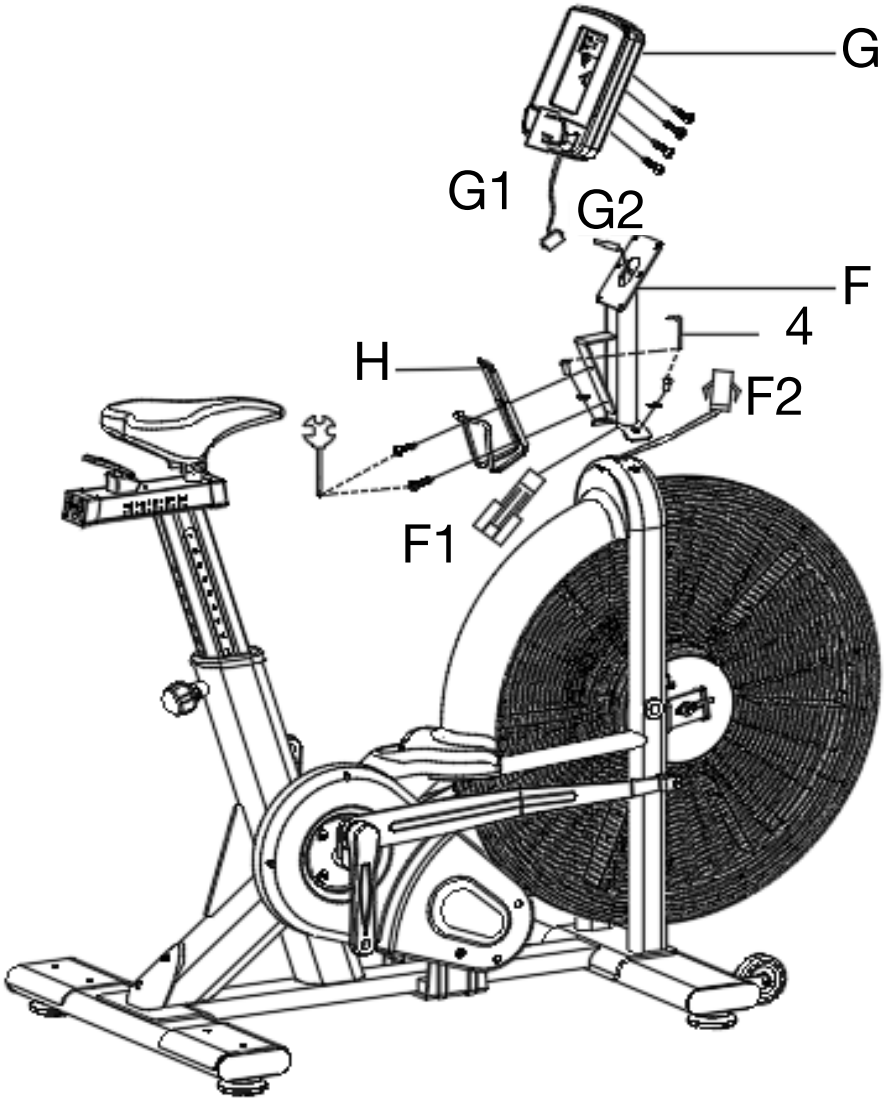

STEP 4: Install Handlebars & Pedals

1. Insert Handlebars:

Slide the left handlebar (J) and right handlebar (K) into the main frame.

Use Open-end wrench (24) to fix them firmly，tightening with tools until secure.

2. Handlebar Connection Joint.

A. Transfer Link (M) with the handlebar Connection Joint (K1)， then repeat the same alignment for t he left side with Handlebar Connection Joint (J1).

B. Use bolts (78)，flat washers (5)，lock washers (95)，and nuts (79) to lock the handlebars securely in place. Use Open-end wrench (17) to fix them firmly，tightening with tools until secure.

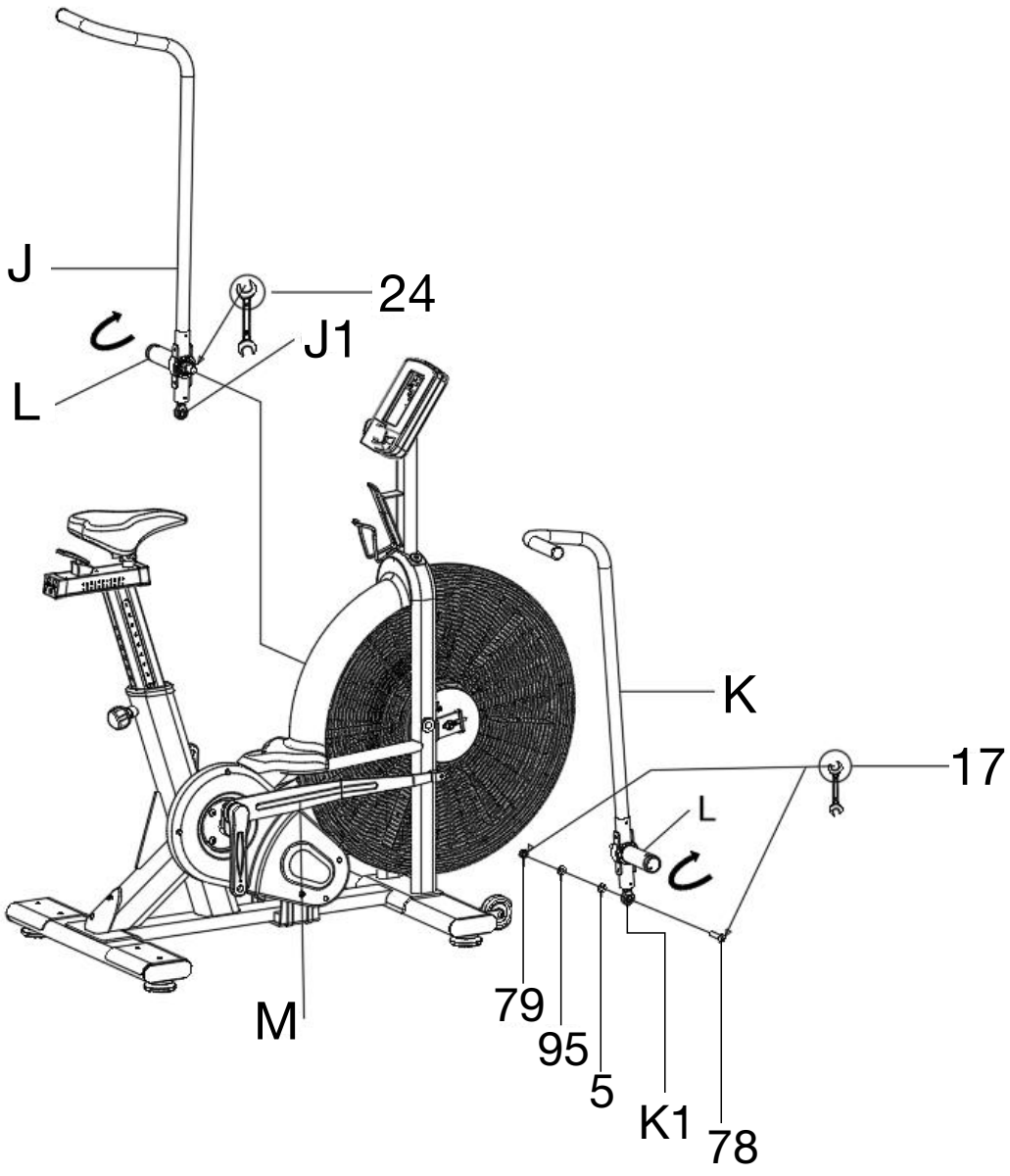

STEP 5: Seat Pedal Installation

1. Check the Labels:

The pedals are marked “L” (Left) and “R” (Right).

2. Match Each Pedal to the Correct Side:

The right pedal N (R) goes on the right crank arm.

The left pedal P (L) goes on the left crank arm.

3. Threading Direction:

Right pedal N (R) : turn clockwise to tighten.

Left pedal P (L) : turn counterclockwise to tighten.

Tip: Hand-tighten the pedals first to avoid cross-threading, then use a Open-end wrench (17) to fully secure them.

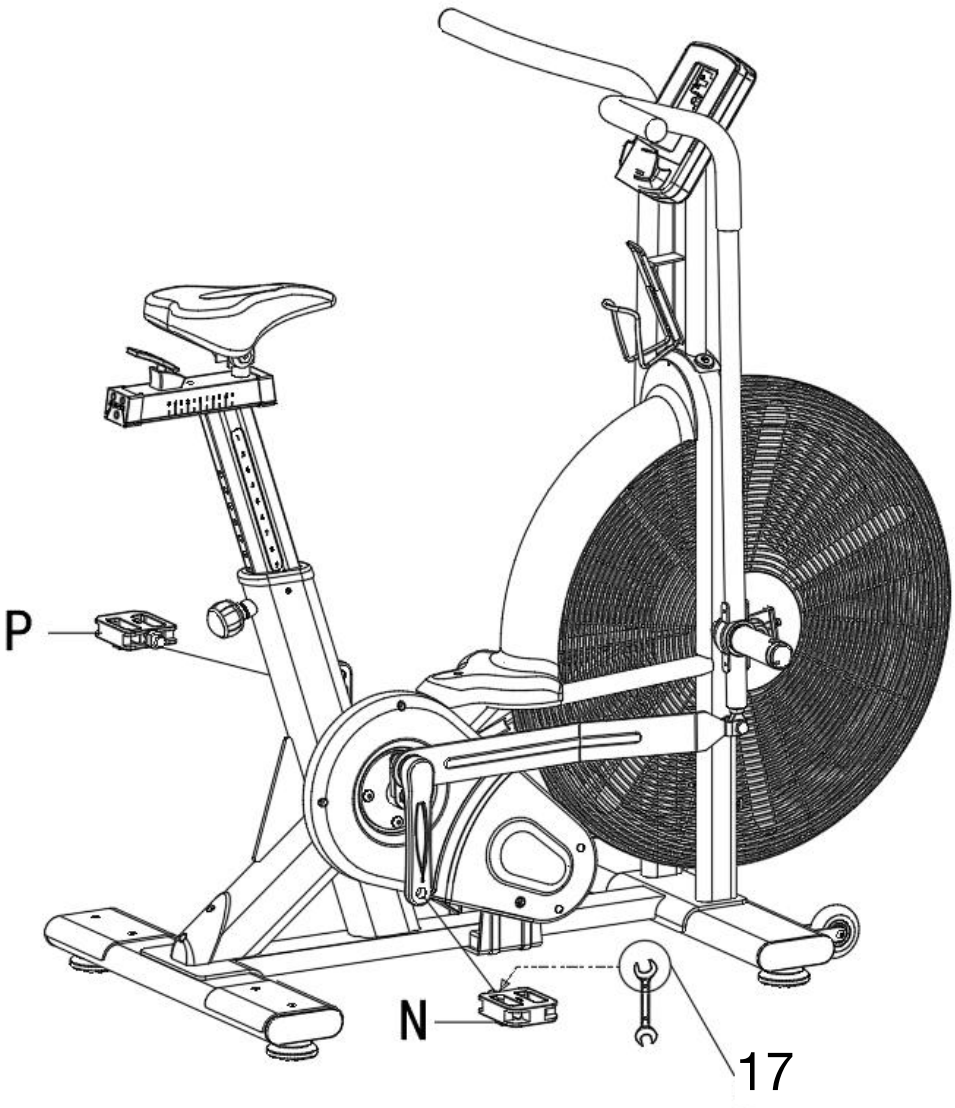

ITEM	SI3924 Instruction Manual

DISPLAY FUNCTIONS

ITEM	DESCRIPTION
RPM	-Display the rotation per minute with range from 0~ 199.
SPEED	-Display current training speed. Maximum speed is 99.9 KM/H or ML/H.
TIME	-Count up - No preset target, Time will count up from 00:00 to maximum 1:59:59 with each increment is 1 minute. -Count down – The console will countdown from preset time to 00:00:00 and each preset increment or decrement will be 1 minute between 00:01:00 to 1:59:00.
DISTANCE	-Accumulates total distance from 0.0 up to 999.9 KM or ML or count down from preset value. User may preset target distance value with UP/DOWN key. Each increment is 1.0KM or ML.
CALORIES	-Accumulates calories consumption or count down during training from 0 to maximum 999 calories.User may preset target Calories with UP/DOWN key.
WATT	-Display the power consumption during training. -Display Range: 0~1999.
PULSE	-User may set up target pulse value from 0~30 to 230 and the console buzzer will beep when the actual heart rate is over the target value during workout.

BUTTON FUNCTION

ITEM	DESCRIPTION
START	-To start workout quickly or resume workout in Stop mode.
STOP	-To stop/pause workout. -To clear up all settings. -Hold on this key for 2 seconds to reboot the console.
DOWN	-To adjust Distance, Calories, Heart-rate, Time, Age value down.
UP	-To adjust Distance, Calories, Heart-rate, Time, Age value up.
Target Distance	-Fast access to Target Distance training mode.
Target Calories	-Fast access to Target Calories training mode.
Target Heart-rate	-Fast access to Target Heart Rate training mode.
Target Time	-Fast access to Target Time training mode.
Interval	-There are 3 programs: INTERVAL 10/20,INTERVAL 20/10, Custom.
ENTER	-To confirm settings or enter program.

Maintenance

The Stealth Air Bike XR must be examined regularly for damage and wear. Damaged or worn components must be replaced immediately with Torque Fitness- approved service parts.

Follow this schedule to keep your bike in peak operating condition:

Daily:

- *Check for loose, broken or damaged parts. Ensure the belt is not slipping, and the arms and pedals are not loose. Tighten components if needed.*
- *Clean with a damp cloth. Do not spray cleaner directly on the bike; moisten the cloth first, then wipe the bike. Do not allow moisture from perspiration to accumulate as it is extremely corrosive.*
- *Ensure bike is level. Adjust levelers if necessary.*

Weekly:

- *Ensure seat adjustments are smooth. If necessary, apply a silicone-based lubricant to the seat post.*
- *With a damp cloth, clean all surfaces of dust and dirt. Do not spray cleaner directly on the bike; moisten the cloth first, then wipe the bike.*

Monthly:

- *Check pedals, crank arms and moving handles for damage or looseness. Tighten if necessary.*
- *Check the belt for signs of wear. Pedal the bike by hand and observe the belt tracking on the fan pulley. Ensure the belt is tracking straight.*
- *Inspect bearings in the bottom bracket, arms and fan. Excessive noise or grinding is a sign of bad bearings. Replace when damaged with Torque Fitness- approved service parts.*

For service and support, contact your dealer, or email service@torquefitness.com, or call 763-754-7533 (8:30 am – 5:00 CST).

Limited Product Warranty

For warranty information,visit www.torquefitness.com/pages/warranty.
If you purchased your machine outside of the United States,consult your local distributor or dealer for warranty coverage.

DON’T QUIT. EVER.™

Torque Fitness
11201 Xeon Street NW Ste 101
Coon Rapids, MN USA 55448
www.torquefitness.com

Phone: 763-754-7533
For sales: sales@torquefitness.com
For service: service@torquefitness.com

© 2025 Torque Fitness. All rights reserved.
P/N 6042601 REV C 07/2025